Computer Networks

Aftab Alam

November 8, 2024 (Thursday)

Lecture # 28

Link Layer

Reliable Transmission Over Unreliable Physical Link

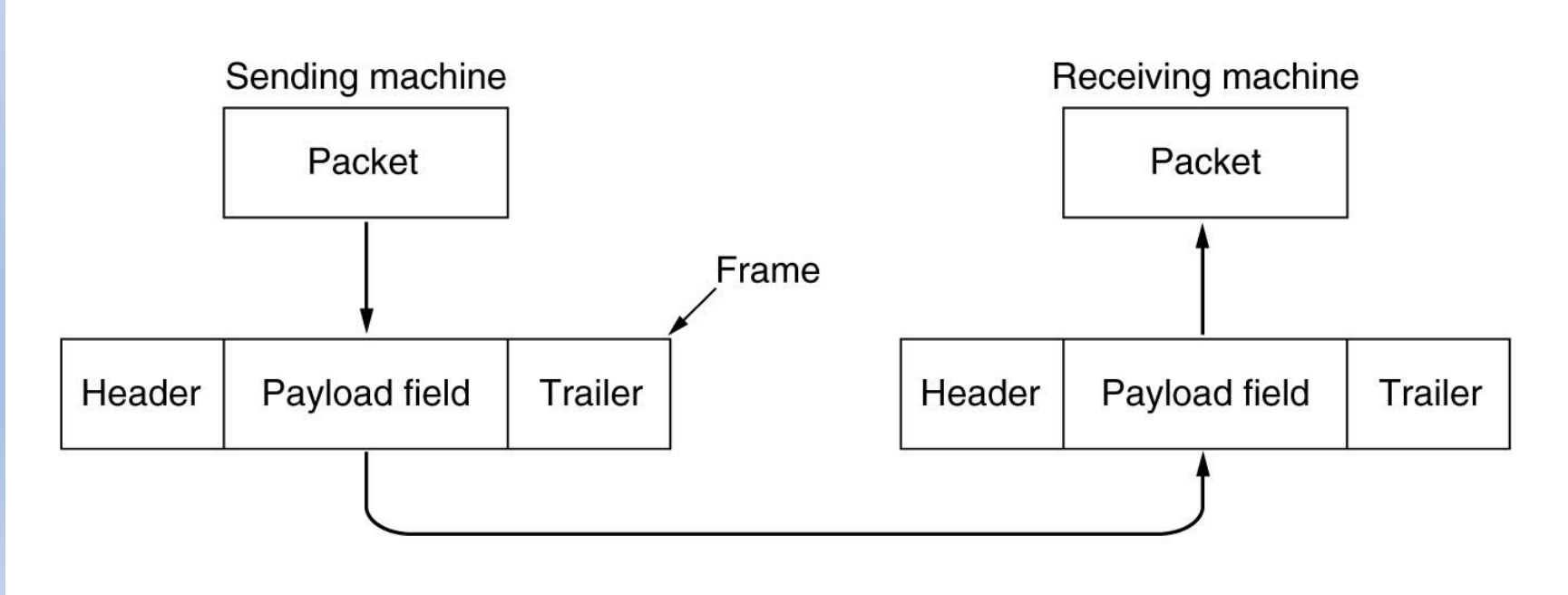

CSMA/CD efficiency

- T_{prop} = max prop delay between 2 nodes in LAN
- t_{trans} = time to transmit max-size frame

$$efficiency = \frac{1}{1 + 5t_{prop}/t_{trans}}$$

- efficiency goes to 1
  - as t_{prop} goes to 0
  - as t_{trans} goes to infinity
- better performance than ALOHA: and simple, cheap, decentralized!

“Taking turns” MAC protocols

channel partitioning MAC protocols:

- share channel *efficiently* and *fairly* at high load
- inefficient at low load: delay in channel access, 1/N bandwidth allocated even if only 1 active node!

random access MAC protocols

- efficient at low load: single node can fully utilize channel
- high load: collision overhead

“taking turns” protocols

- look for best of both worlds!

“Taking turns” MAC protocols

polling:

- master node “invites” other nodes to transmit in turn
- typically used with “dumb” devices
- concerns:
  - polling overhead
  - latency
  - single point of failure (master)

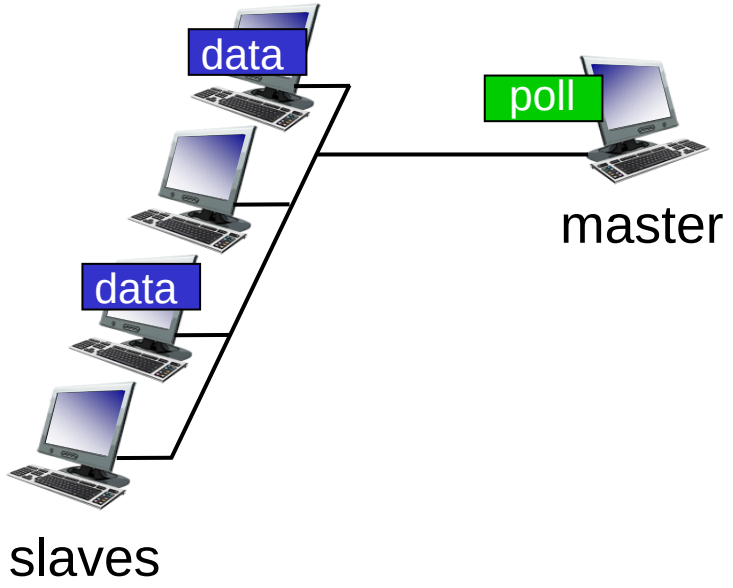

“Taking turns” MAC protocols

token passing:

- control *token* passed from one node to next sequentially.
- token message
- concerns:
  - token overhead
  - latency
  - single point of failure (token)

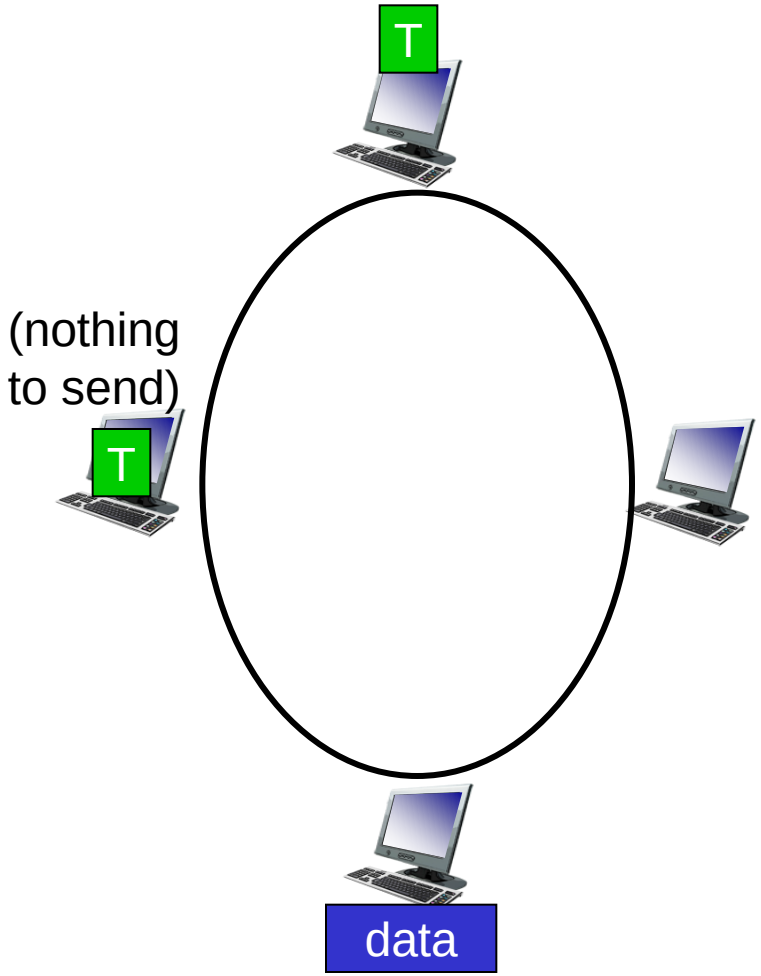

Cable access network: FDM, TDM *and* random access!

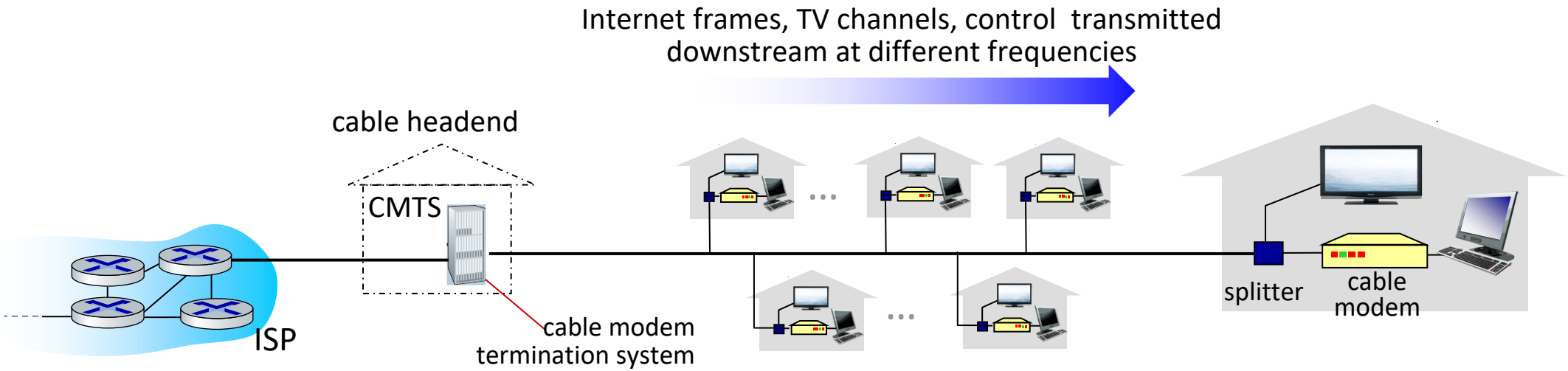

- multiple downstream (broadcast) FDM channels: up to 1.6 Gbps/channel
  - single CMTS transmits into channels
- multiple upstream channels (up to 1 Gbps/channel)
  - multiple access: all users contend (random access) for certain upstream channel time slots; others assigned TDM

Summary of MAC protocols

- channel partitioning, by time, frequency or code
  - Time Division, Frequency Division
- random access (dynamic),
  - ALOHA, S-ALOHA, CSMA, CSMA/CD
  - carrier sensing: easy in some technologies (wire), hard in others (wireless)
  - CSMA/CD used in Ethernet
  - CSMA/CA used in 802.11
- taking turns
  - polling from central site, token passing
  - Bluetooth, FDDI, token ring

Link layer, LANs: roadmap

- introduction
- error detection, correction
- multiple access protocols
- LANs
  - addressing, ARP
  - Ethernet
  - switches
  - VLANs
- link virtualization: MPLS
- data center networking

- a day in the life of a web request

MAC addresses

- 32-bit IP address:
  - *network-layer* address for interface
  - used for layer 3 (network layer) forwarding
  - e.g.: 128.119.40.136
- MAC (or LAN or physical or Ethernet) address:
  - function: used "locally" to get frame from one interface to another physically-connected interface (same subnet, in IP-addressing sense)
  - 48-bit MAC address (for most LANs) burned in NIC ROM, also sometimes software settable
  - e.g.: 1A-2F-BB-76-09-AD

hexadecimal (base 16) notation
(each "numeral" represents 4 bits)

MAC addresses

each interface on LAN

- has unique 48-bit MAC address
- has a locally unique 32-bit IP address (as we've seen)

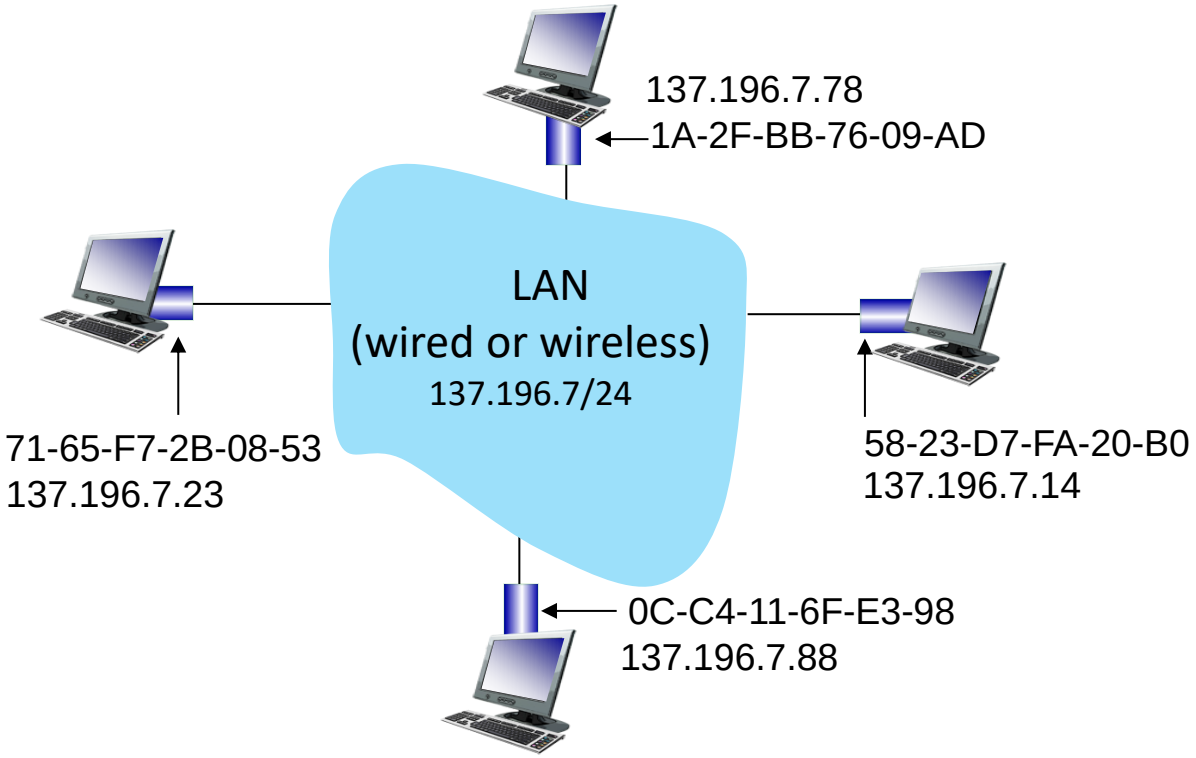

MAC addresses

- MAC address allocation administered by IEEE
- manufacturer buys portion of MAC address space (to assure uniqueness)
- analogy:
  - MAC address: like Social Security Number
  - IP address: like postal address
- MAC flat address: portability
  - can move interface from one LAN to another
  - recall IP address *not* portable: depends on IP subnet to which node is attached

ARP: address resolution protocol

Question: how to determine interface's MAC address, knowing its IP address?

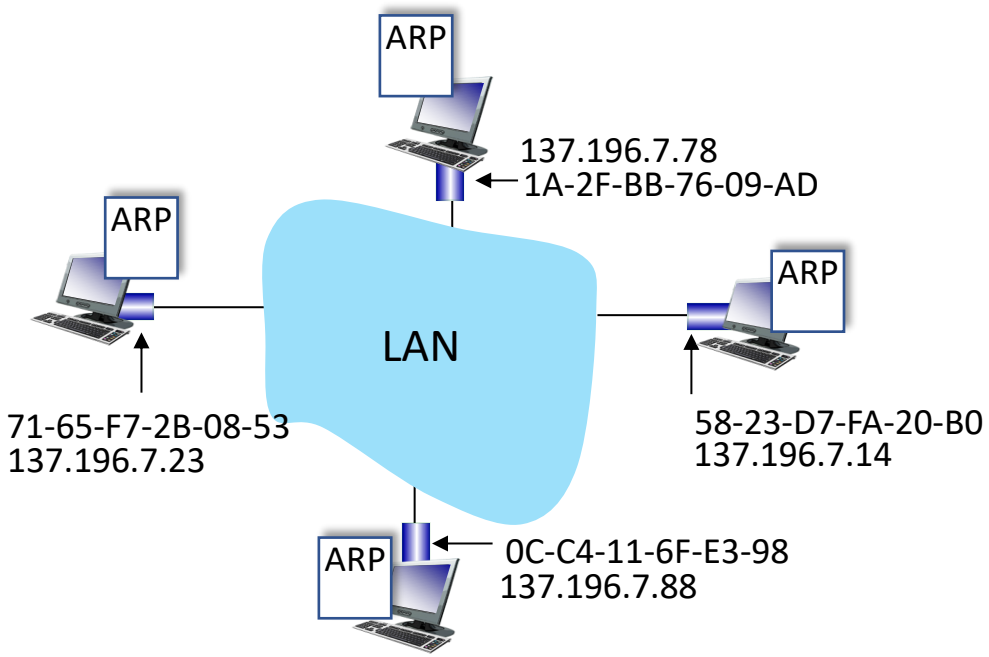

ARP table: each IP node (host, router) on LAN has table

- IP/MAC address mappings for some LAN nodes:

  < IP address; MAC address; TTL>

- TTL (Time To Live): time after which address mapping will be forgotten (typically 20 min)

ARP protocol in action

example: A wants to send datagram to B

- B's MAC address not in A's ARP table, so A uses ARP to find B's MAC address

A broadcasts ARP query, containing B's IP addr

1
- destination MAC address = FF-FF-FF-FF-FF-FF
- all nodes on LAN receive ARP query

ARP table in A

IP addr	MAC addr	TTL

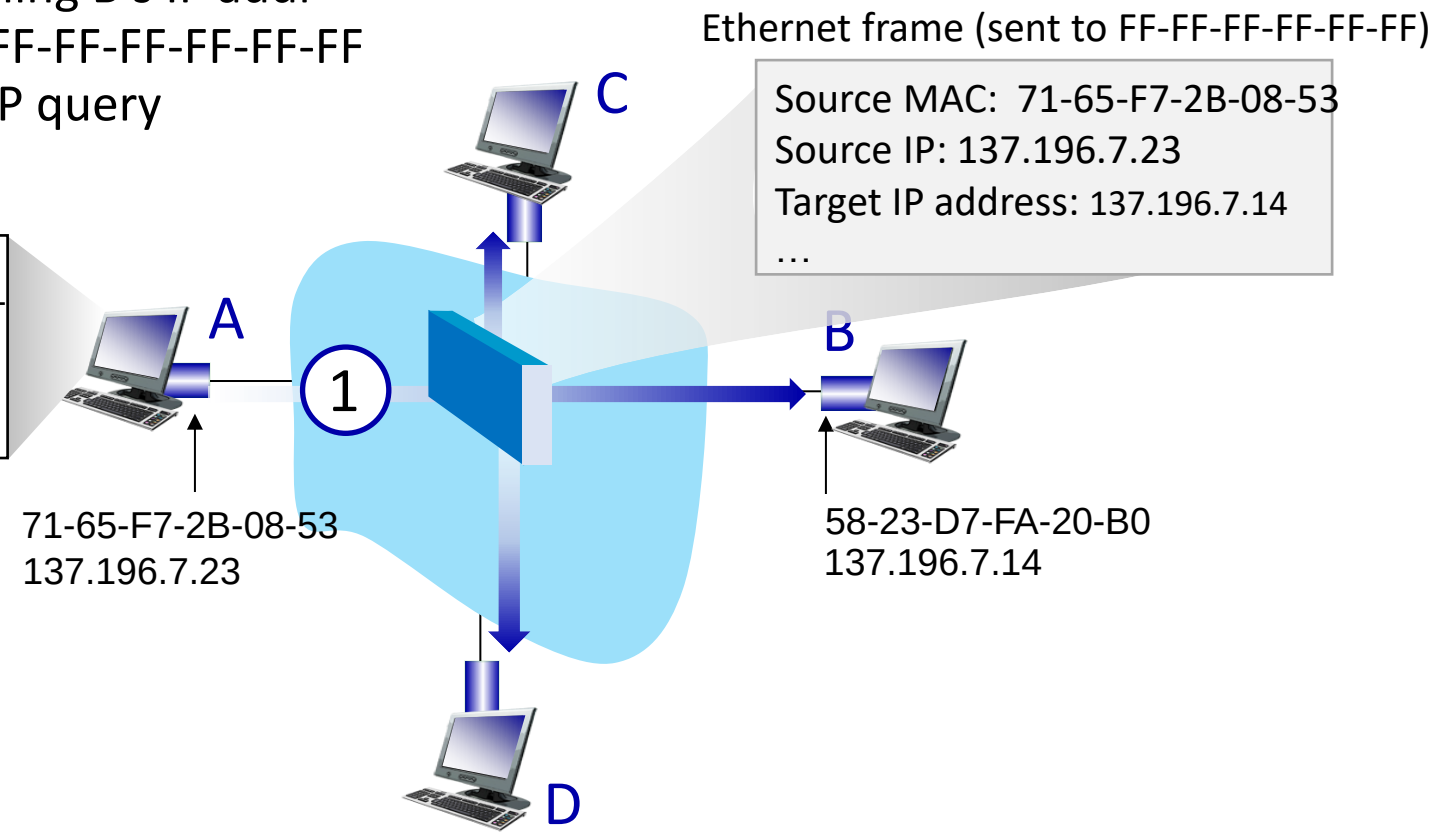

ARP protocol in action

example: A wants to send datagram to B

- B's MAC address not in A's ARP table, so A uses ARP to find B's MAC address

ARP table in A

IP addr	MAC addr	TTL

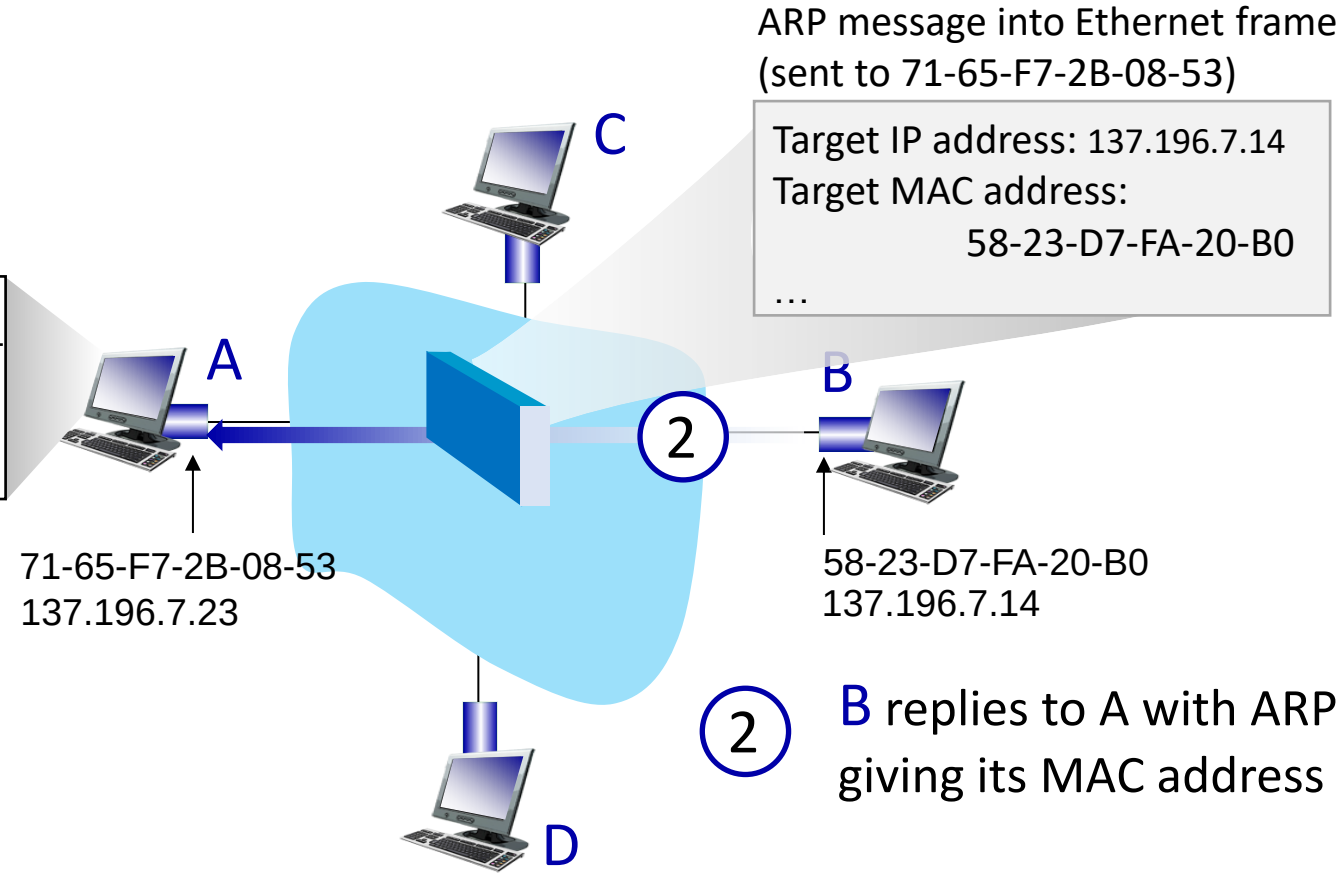

2 B replies to A with ARP response, giving its MAC address

ARP protocol in action

example: A wants to send datagram to B

- B's MAC address not in A's ARP table, so A uses ARP to find B's MAC address

ARP table in A

IP addr	MAC addr	TTL
137.196.7.14	58-23-D7-FA-20-B0	500

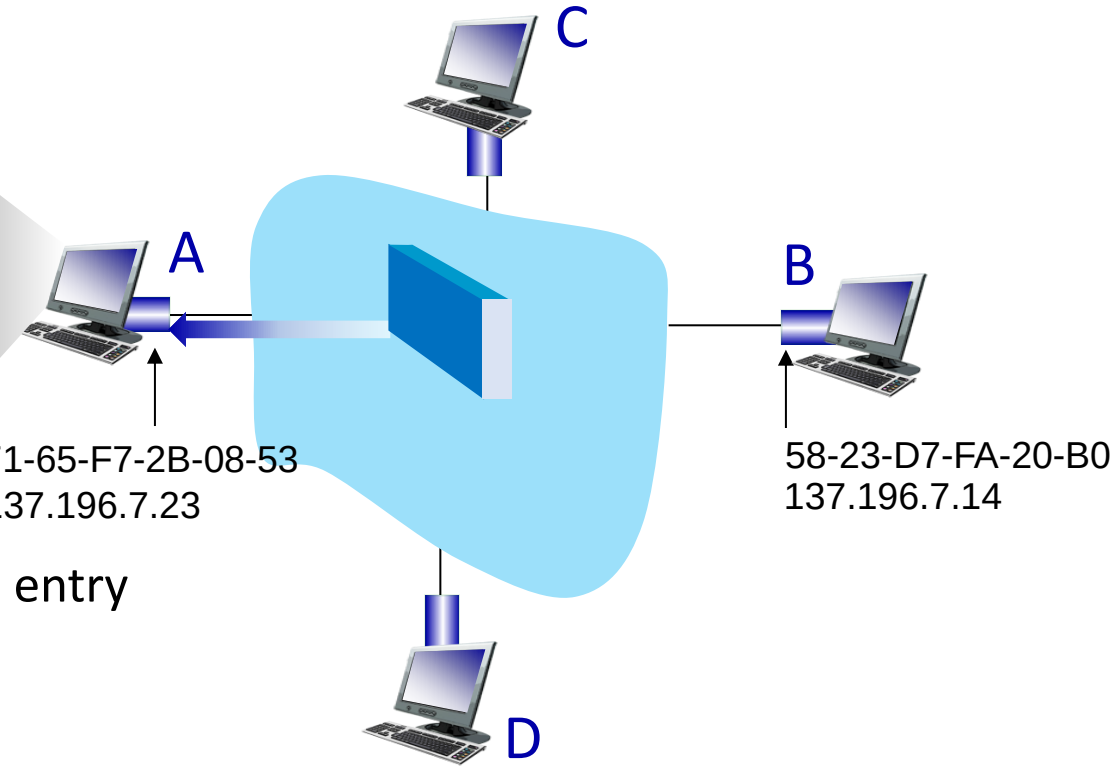

3 A receives B's reply, adds B entry into its local ARP table

Routing to another subnet: addressing

walkthrough: sending a datagram from *A* to *B* via *R*

- focus on addressing – at IP (datagram) and MAC layer (frame) levels
- assume that:
  - A knows B's IP address
  - A knows IP address of first hop router, R (how?)
  - A knows R's MAC address (how?)

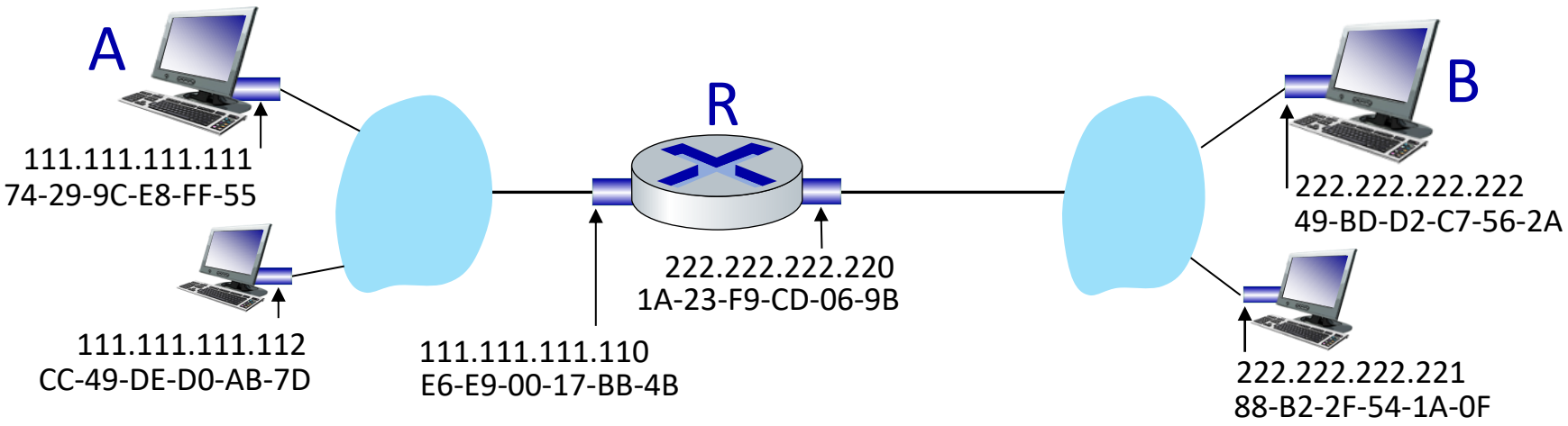

Routing to another subnet: addressing

- A creates IP datagram with IP source A, destination B
- A creates link-layer frame containing A-to-B IP datagram
  - R's MAC address is frame's destination

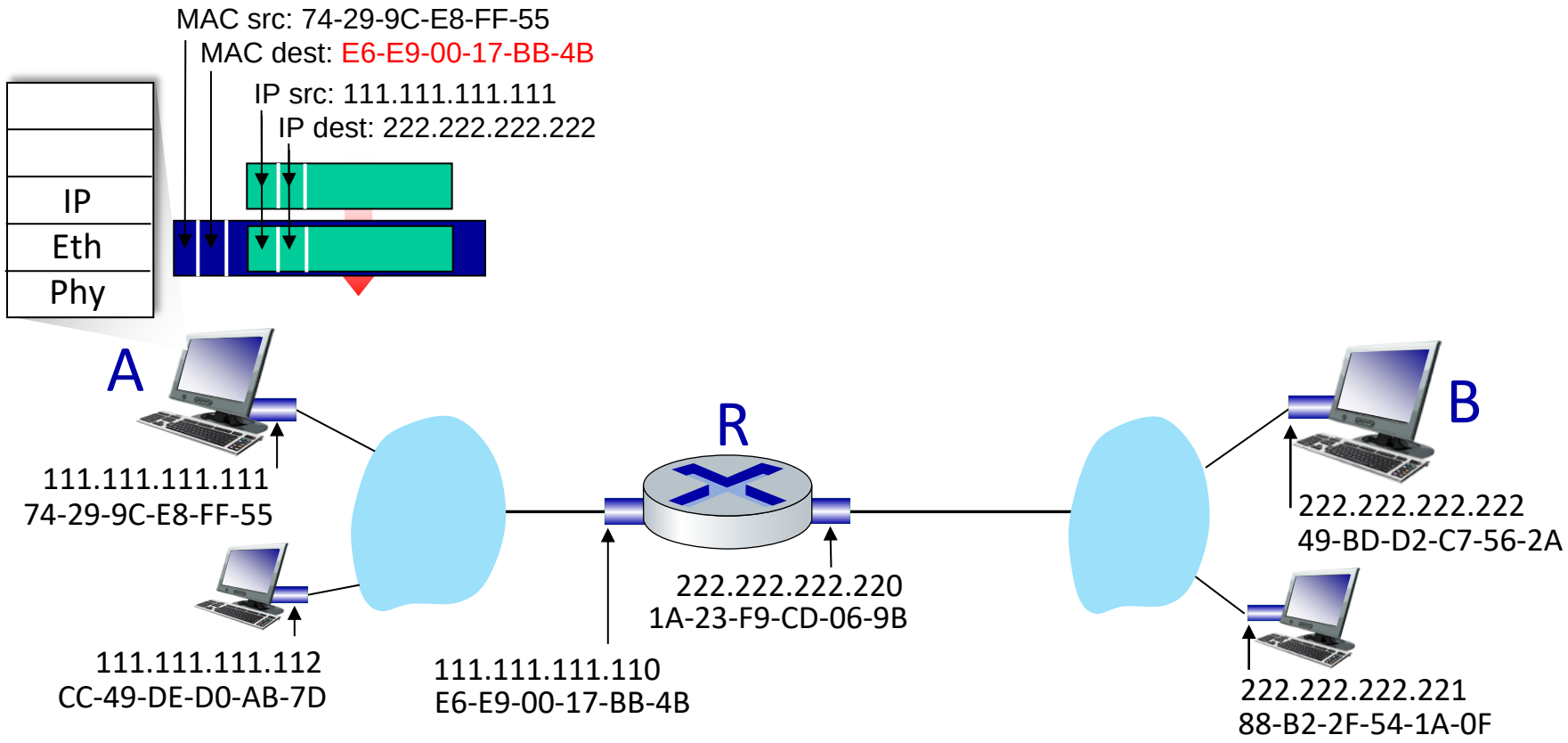

Routing to another subnet: addressing

- frame sent from A to R
- frame received at R, datagram removed, passed up to IP

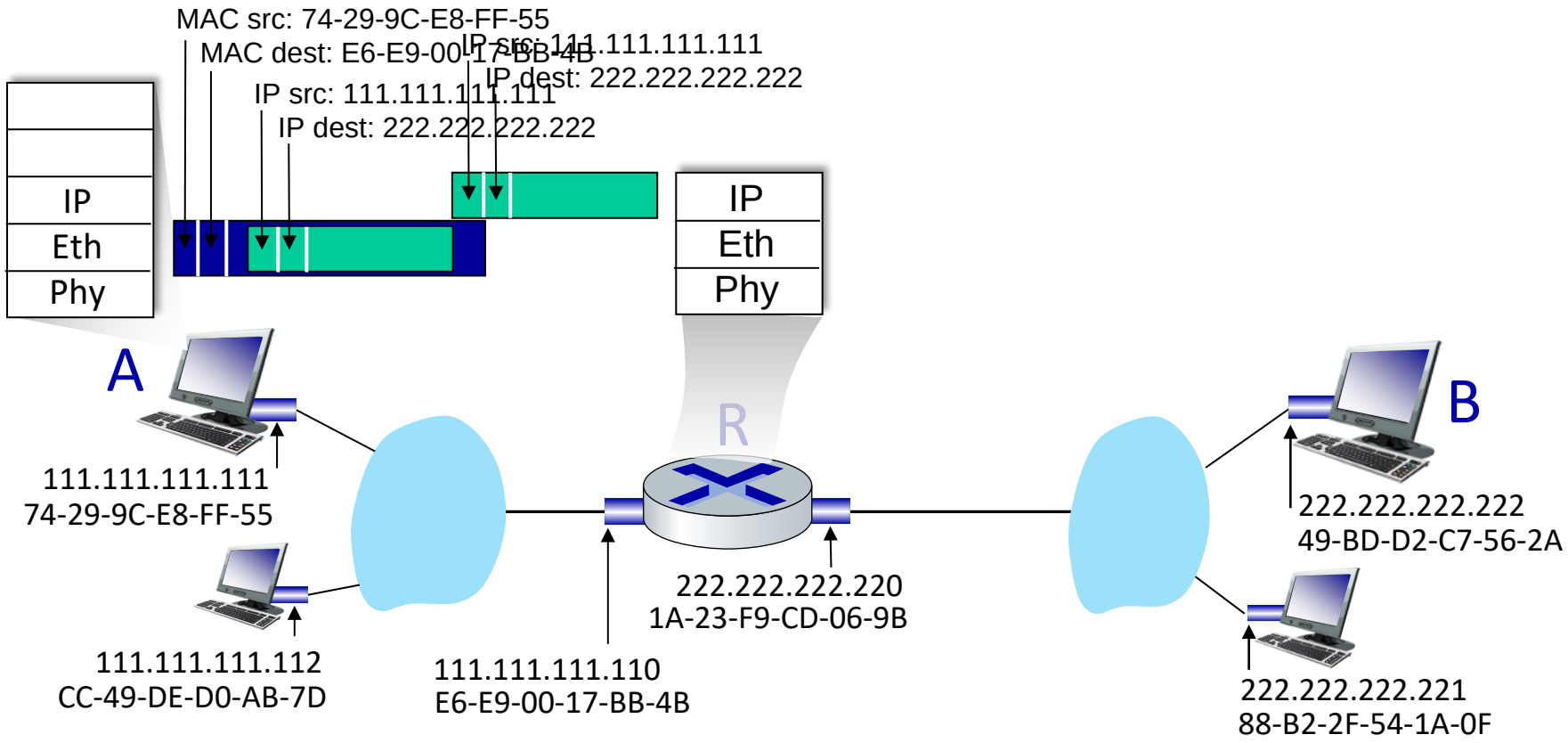

Routing to another subnet: addressing

- R determines outgoing interface, passes datagram with IP source A, destination B to link layer
- R creates link-layer frame containing A-to-B IP datagram. Frame destination address: B's MAC address

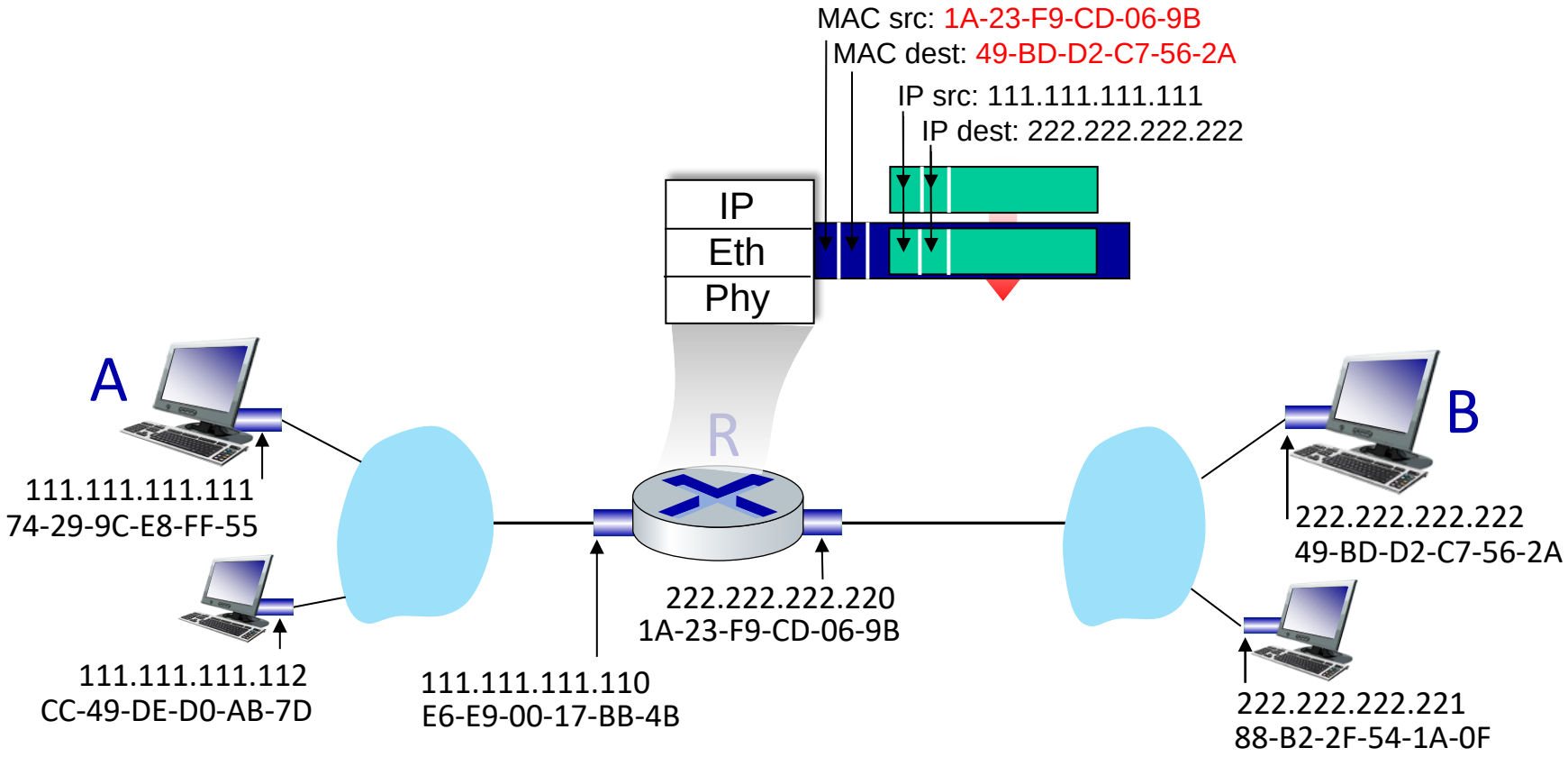

Routing to another subnet: addressing

- R determines outgoing interface, passes datagram with IP source A, destination B to link layer
- R creates link-layer frame containing A-to-B IP datagram. Frame destination address: B's MAC address
- transmits link-layer frame

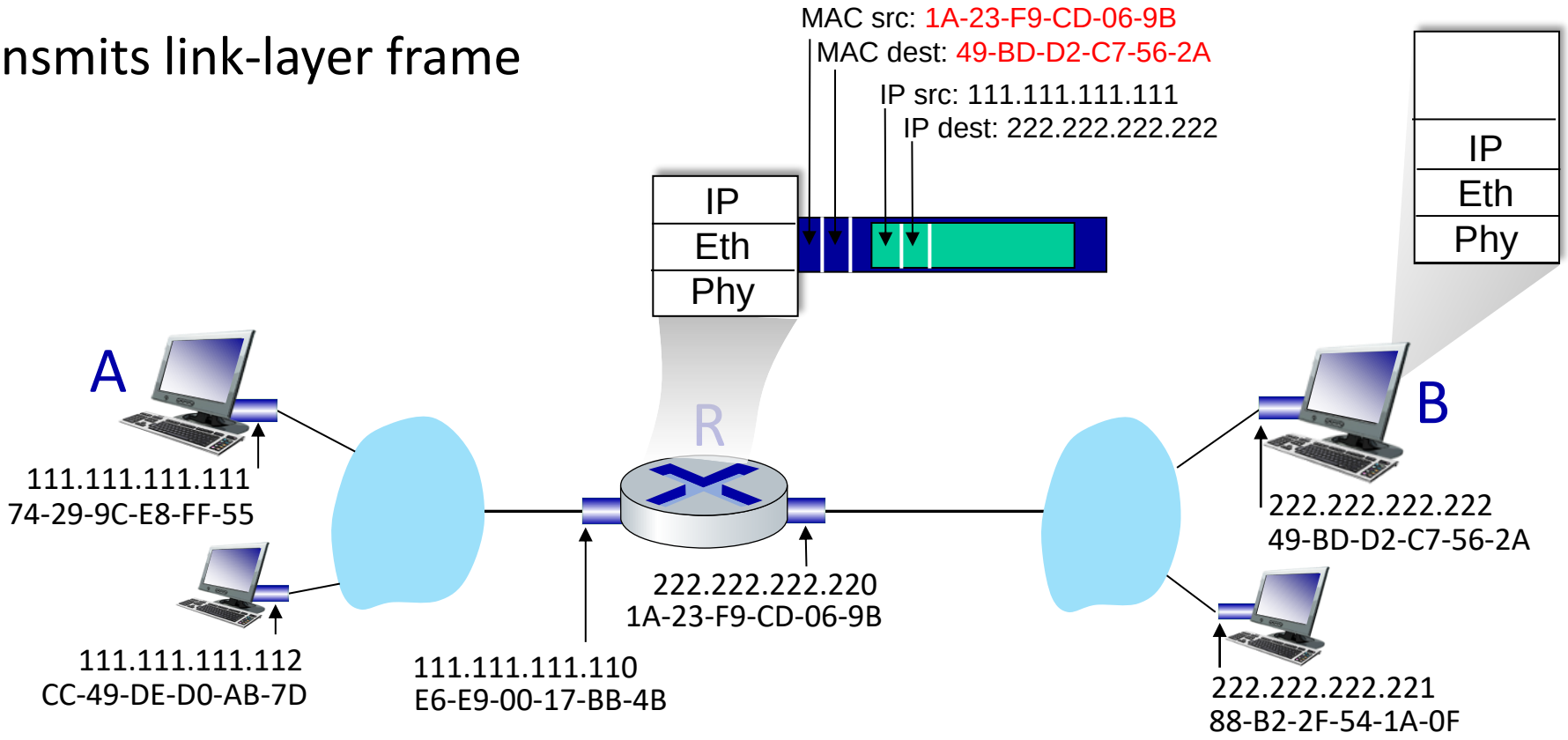

Routing to another subnet: addressing
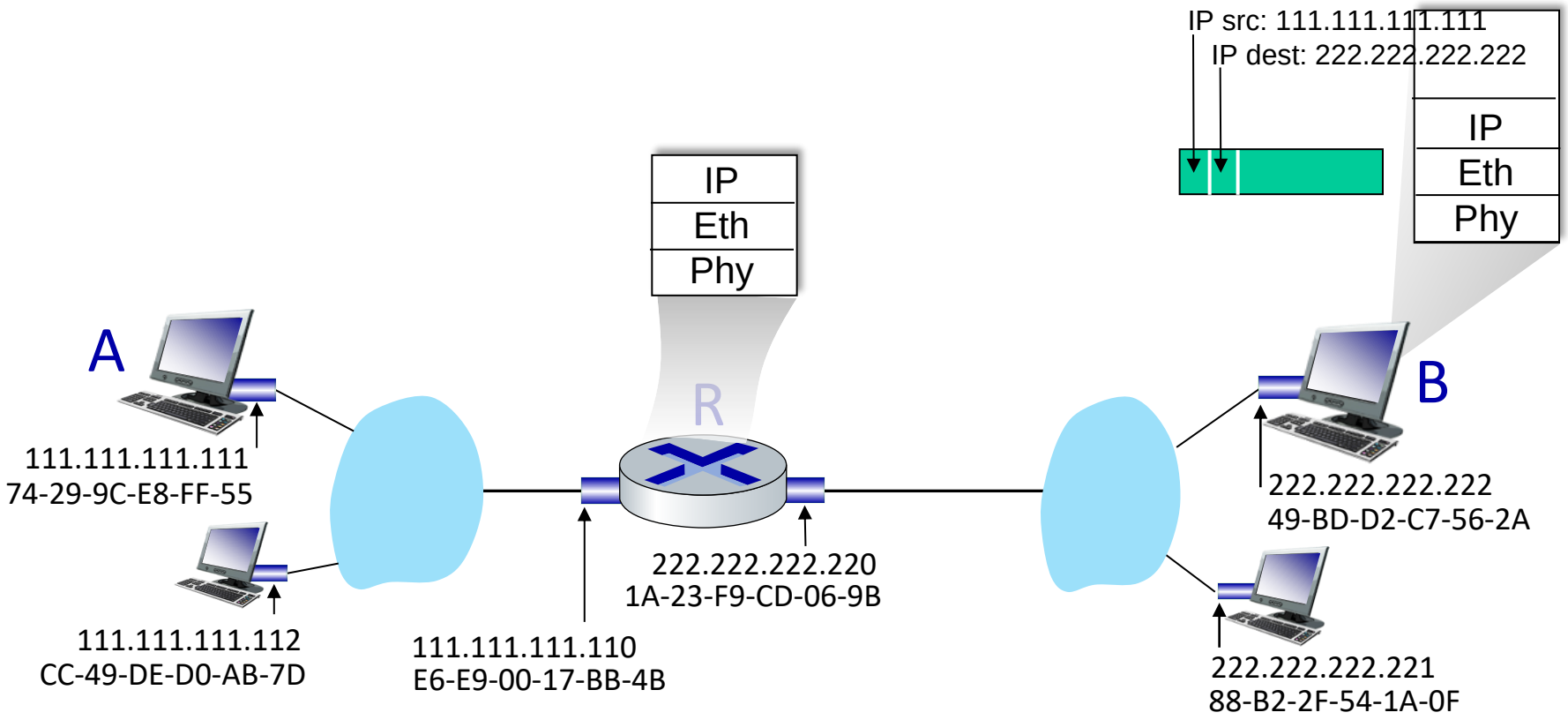
- B receives frame, extracts IP datagram destination B
- B passes datagram up protocol stack to IP